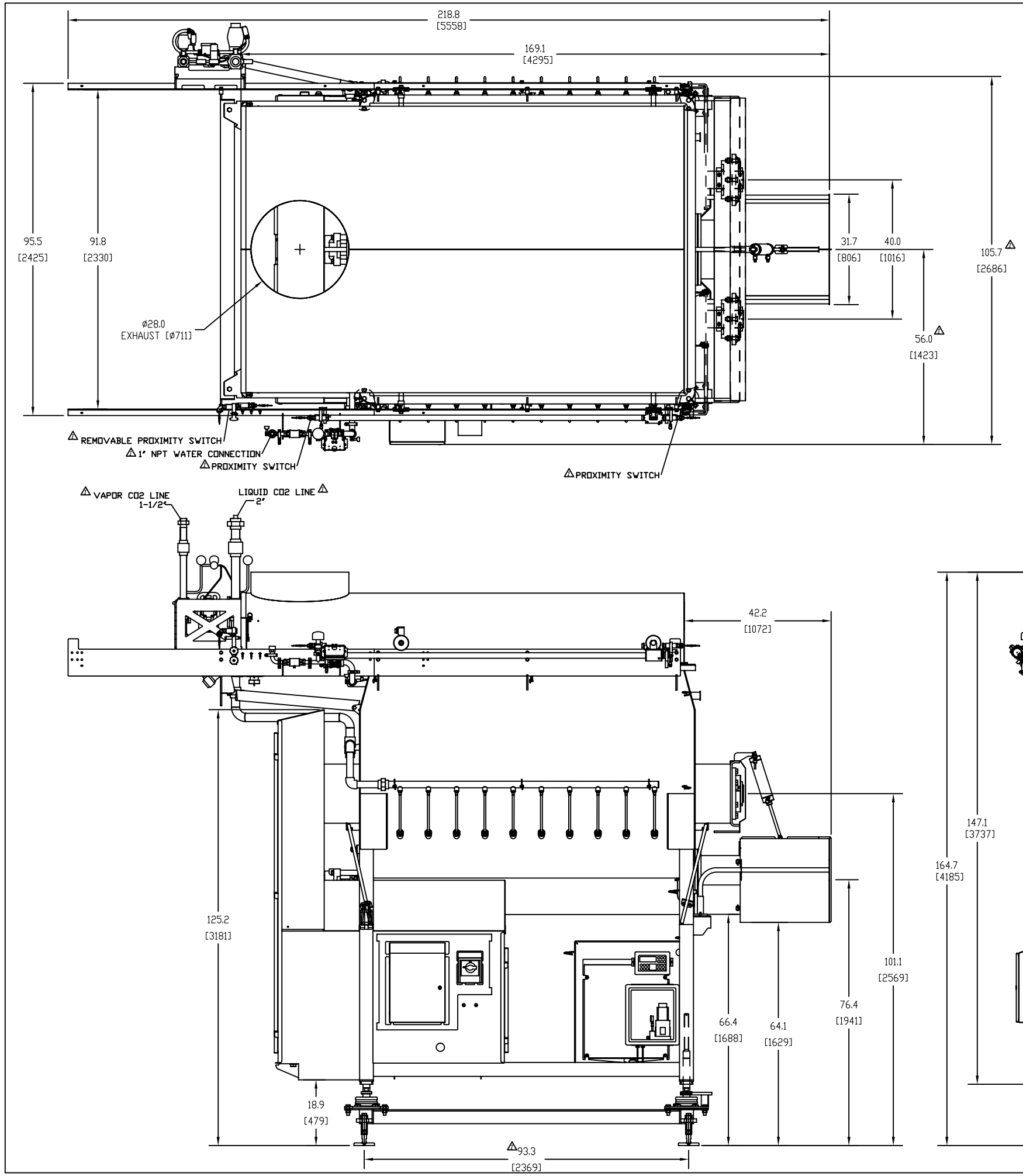

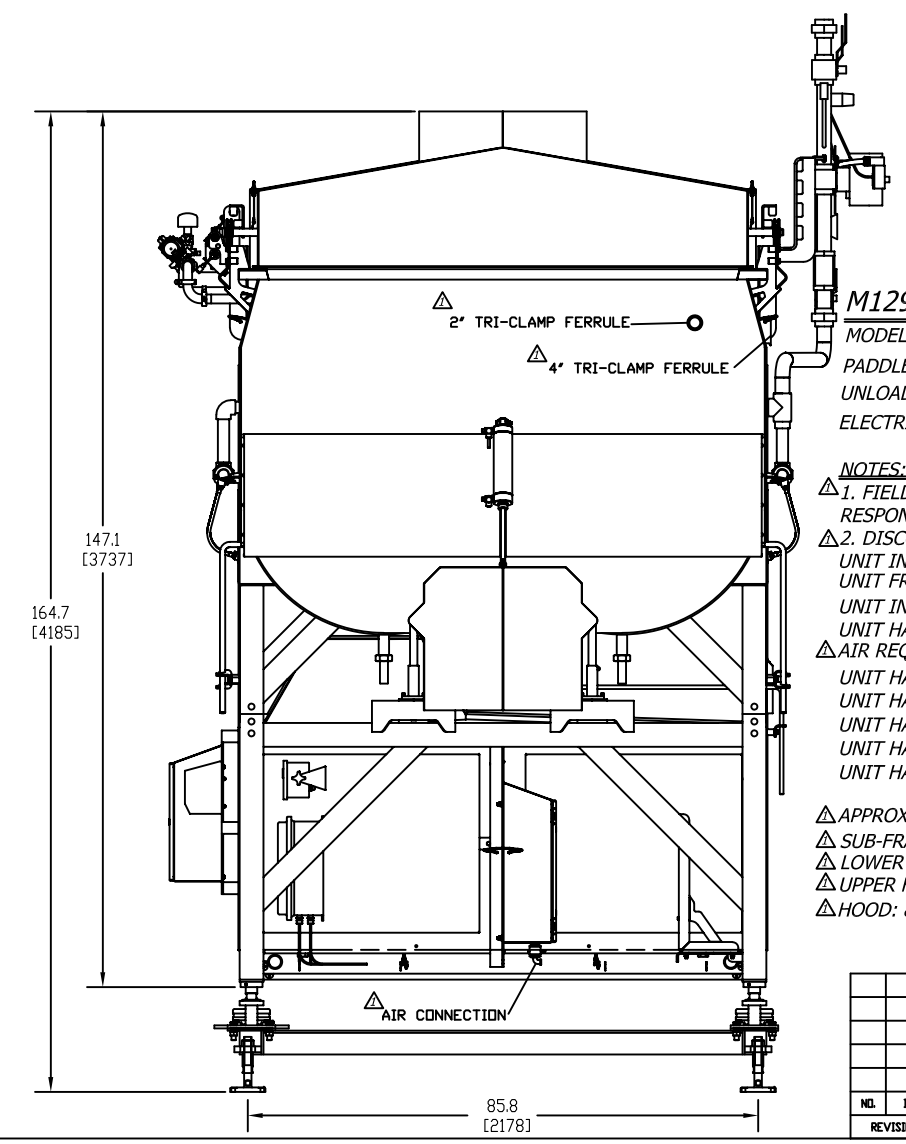

This Drawing is the property of
PROVISUR® TECHNOLOGIES
and shall not be reproduced, copied, lent, or disposed of, nor used for any purpose other than for which it is specifically furnished and must be returned upon demand.

APPROVAL DRAWING

Approval copy of this drawing must be received by

to meet the required shipping date.

1) ☐ APPROVED - MANUFACTURING may proceed.

2) ☐ NOTE APPROVED - Correct drawing as noted and resubmit. (Requote if necessary)

BY: _____ DATE: _____

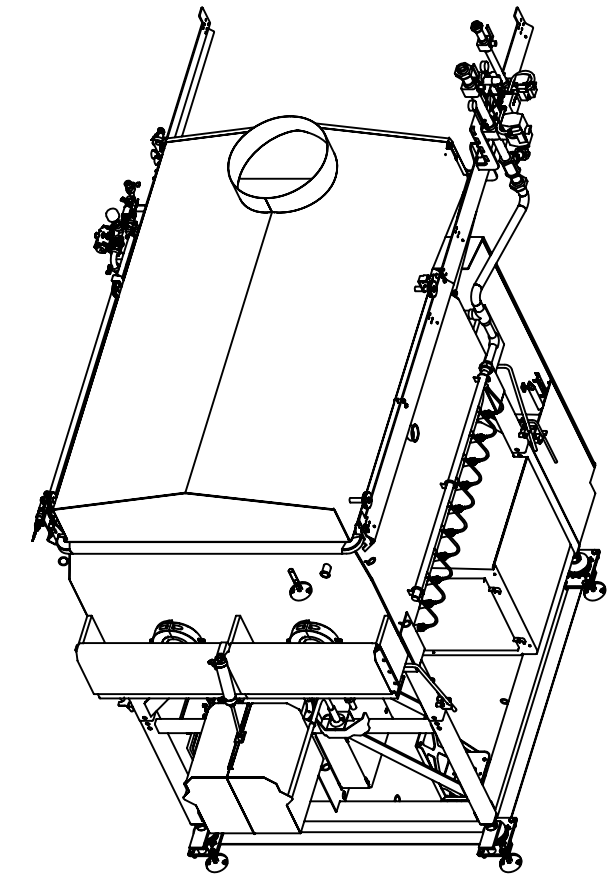

M12900 MIXER SPECIFICATIONS

MODEL M12900 MIXER
PADDLE DRIVE IS 75 HP (56 kW)
UNLOAD SCREW DRIVE IS 15 HP (11.2 kW)
ELECTRICAL CONTROLS BY PROVISUR TECHNOLOGIES

NOTES:

1. FIELD INSTALLATION AND WIRING ARE THE SOLE RESPONSIBILITY OF THE CUSTOMER.
2. DISCONNECTS PROVIDED BY PROVISUR FOR MIXER
UNIT INCLUDES ADJUSTABLE LEGS WITH SUBFRAME
UNIT FRAME, TUB, PADDLES AND UNLOAD SCREW ARE 304 STAINLESS STEEL
UNIT INCLUDES ADJUSTABLE LEGS WITH SUBFRAME
UNIT HAS SLIDING HOOD POWERED BY PNEUMATIC CYLINDER
AIR REQUIREMENT OF 25 CFM AIR AT 90 PSI
UNIT HAS EMERY HYDRAULIC LOAD CELLS
UNIT HAS 4" FERRULE
UNIT HAS 2" FERRULE
UNIT HAS WATER SPRAY BAR, WATER METER, AND BALL VALVE
UNIT HAS BOTTOM INJECTION CO2

APPROXIMATE WEIGHT AND SIZE:
SUB-FRAME: 400 LB (181 KG), 106" x 94" x 12"
LOWER FRAME WITH DRIVE: 6500 lb (2948 Kg), 126" x 106" x 64"
UPPER FRAME WITH PADDLES: 9,000 lb (4082 Kg), 160" x 114" x 84"
HOOD: 800 lb (363 Kg), 130" x 96" x 30"

NO.	DATE	BY	NO.	DATE	BY
			1	5/22/19	OHD

REVISION STATUS | REVISION STATUS

TOLERANCE UNLESS NOTED
DEC.0 ±.030
DEC.00 ±.010
DEC.000 ±.003
ANGL ±1/2°

SCALE: 1/16" = 1"
DRAWN BY: JRJ
DATE: 5/06/19
CHECKED BY:

PROVISUR TECHNOLOGIES

TITLE: APPROVAL DRAWING - IMPOSSIBLE FOODS
RH M12900 MIXER
S/N 19-251

PART NUMBER: WMA12900-19251
NEXT ASSEMBLY: EL7233
DRAWN VIA: WMA12900-17311

SHEET LEVEL: 1 OF 1
DRAWING NUMBER: 201-19251-D
REV. NO. 1

AUTOCAD